PRELIMINARY DESIGN REPORT

TCE CANSAT 26’

1. Mission Overview

1.1 Problem Statement

Low-altitude aerial payload systems deployed from small unmanned aerial vehicles (UAVs) often lack onboard analytical capability to evaluate descent stability and wind-induced drift behavior. Most micro-CanSat systems focus primarily on data collection such as altitude and temperature, without assessing aerodynamic behavior during descent.

For precision aerial deployment applications—such as disaster relief payload drops, environmental monitoring, and micro atmospheric studies—understanding descent stability and wind drift characteristics is critical.

This mission aims to develop a compact CanSat capable of performing real-time descent stability classification and wind drift trend estimation using onboard sensor fusion techniques.

1.2 Motivation and Relevance

Understanding descent behavior has practical importance in:

1. Disaster response supply drops
2. Micro aerial deployment systems
3. Atmospheric profiling missions
4. Low-altitude experimental aerospace studies

By integrating intelligent analysis into a compact CanSat platform, this project demonstrates how micro payload systems can evolve from passive sensors to analytical aerospace subsystems.

2. Mission Objectives

2.1 Mandatory Mission Objectives

The CanSat shall:

1. Measure altitude continuously during descent from deployment to touchdown.
2. Measure ambient atmospheric temperature during descent.
3. Record total descent time from release to impact.
4. Store all mission data onboard in time-stamped CSV format.
5. Ensure safe recovery without structural or electrical hazards.

2.2 Open Innovation Objectives

2.2.1 Descent Stability Classification

The system shall use IMU and barometric sensor fusion to:

1. Monitor tilt angle variation
2. Measure oscillation amplitude
3. Detect rotational disturbances

Classify descent behavior into:

i. Stable
ii. Mild Oscillation
iii. Turbulent

2.2.2 Wind Drift Trend Estimation

The system shall analyze:

1. Lateral acceleration components
2. Oscillation asymmetry
3. Descent velocity variations

Using these parameters, the system will estimate the trend of wind influence during descent.

All classification results will be validated using post-flight data plots.

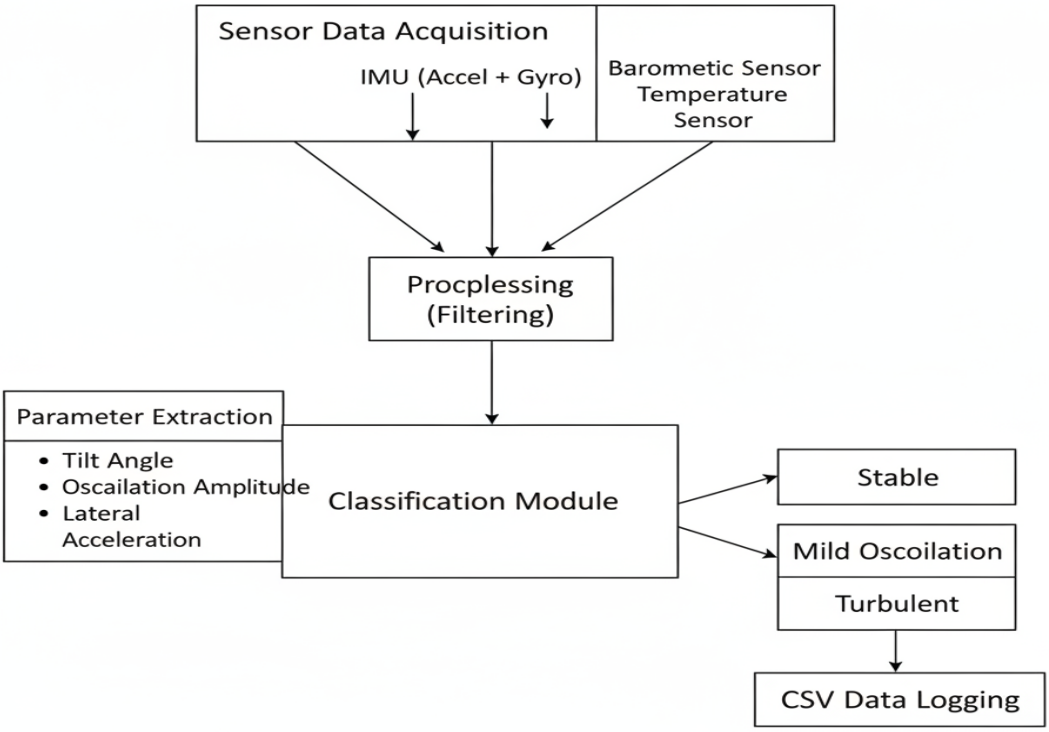

Fig. 1. Data flow and Stability classification

3. System Architecture

3.1 Overall Block Diagram

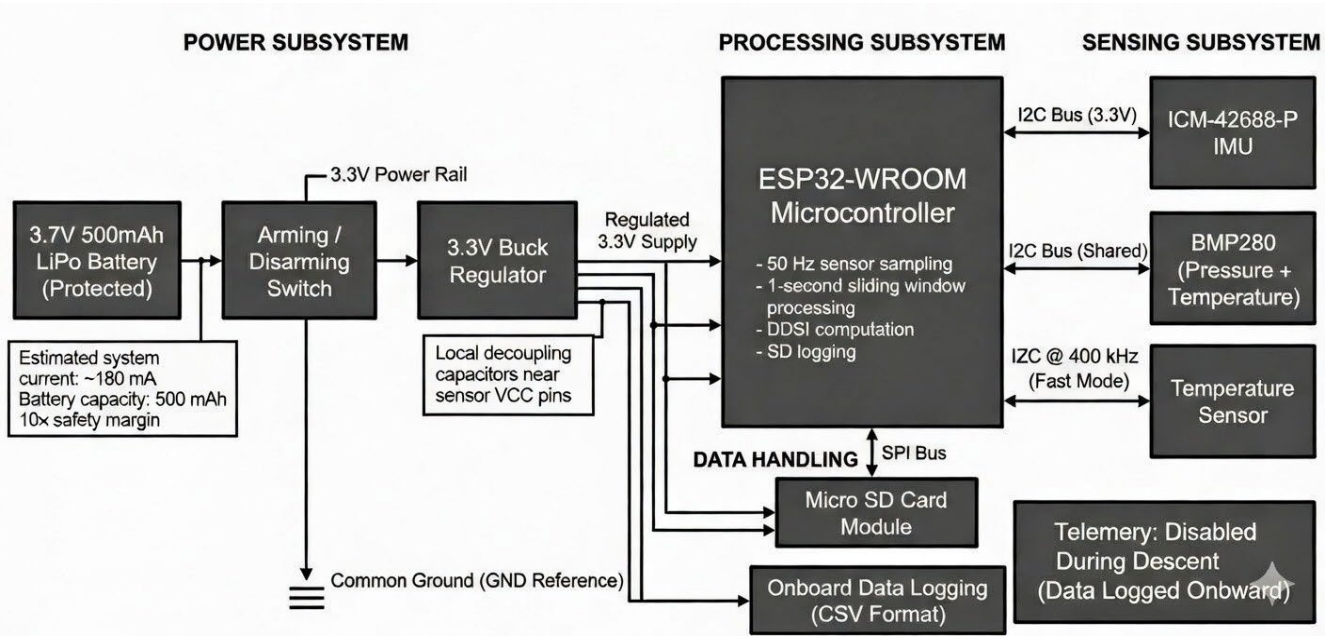

Fig. 2. Block diagram

3.2 Subsystem Description

3.2.1 Structural Subsystem

1. Cylindrical body
2. Diameter ≤ 65 mm
3. Height ≤ 110 mm
4. 3D printed PLA structure
5. Internal vertical component stacking
6. Bottom shock-absorbing layer

3.2.2 Power Subsystem

1. Lithium-ion battery pack
2. Secure mounting
3. Insulated wiring
4. Arming/disarming switch
5. Voltage regulation for stable sensor supply

3.2.3 Sensing Subsystem

1. Barometric Sensor (BMP280 or equivalent)
2. Continuous altitude measurement
3. Time-referenced pressure logging
4. IMU (Accelerometer + Gyroscope)
5. Tilt detection
6. Oscillation monitoring

7. Rotational movement tracking
8. Temperature Sensor
9. Ambient temperature logging during descent

3.2.4 Processing Subsystem

1. ESP32 microcontroller
2. 1 Hz minimum sampling rate
3. Time-stamped data logging
4. Real-time classification logic
5. Buffered SD card writing

3.2.5 Data Handling

CSV format storage

Parameters recorded:

1. Time
2. Altitude
3. Temperature
4. Acceleration (X, Y, Z)
5. Gyroscope (X, Y, Z)
6. Stability classification state

Raw data will be preserved without post-flight modification.

4. Deployment & Descent Concept

4.1 Deployment

Drone-based vertical release

1. Deployment altitude: 50 m AGL
2. Vertical orientation maintained

4.2 Descent Mechanism

1. Passive circular parachute
2. Four-point symmetric suspension
3. Centre-mounted anchor point
4. No active propulsion or spin mechanism